Happy Brands

Glenmark, Wrigley (A Subsidiary of Mars, Incorporated), Merck, AkzoNobel, Abbott (A Promise for Life), Amul (The Taste of India)

DIC, Jotun, APP (USE OUR PAPER, WE PLANT MORE TREES), GSK, TOTO, Cipla

Cadbury, Dabur, Nestlé (Good Food, Good Life), Unilever, TOYO INK, Multilac

Binani (Braj Binani Group), Imerys (Transform to Perform), Poddar Pigments, Roca, Finolex (gets people together), Godrej

مجموعة السنبلة Sunbulah Group, asianpaints, Parle, Tata Chemicals Limited, Heinz, CUMI

Saint-Gobain, Haldiram's (Nagpur, Taste of Tradition), wilmar, Paperboards and Specialty Papers Division (Enduring Value), GEA, Teva (Teva Pharmaceuticals Ltd)

UPL, HNG (Open Your World), Morde, Dukes (Energy Unlimited), Kerry, Reliance Industries Limited

Customer Testimonials

amneal Pharmaceuticals

We are thankful to Galaxy Sivtek team for working with Amneal as partner and getting the special pharma sifter developed to remove black particles from their product while check sieving prior to packing.

Mr. Kuldeep Agrawal
Sr. Vice President

Leading API Company

Godawari udyog

We have procured Roto Sifter RS-500 from Galaxy Sivtek for corn-grit powder application. The machine is performing very good without any breakdown. We are also happy with after sales service by Galaxy Sivtek.

Mr. V.R. Masutage
Head Engineering

Global Food & Beverage Company

Sudeep Pharma Pvt. Ltd.

We are highly satisfied with quality and performance of Super SIVTEK for gradation of calcium carbonate powder. We prefer to procure vibro sifters from Galaxy Sivtek. We are also happy with services extended to us by Galaxy Sivtek.

Mr. M.J. Desai
Purchase Manager

Global Pharmaceutical, Food & Feed Ingredient Company

GALAXY SIVTEK
SIEVING & FILTERING Solutions Galaxy Wide

Corporate Office & Plant:
Galaxy Sivtek Pvt. Ltd.
Plot No. 1406, GIDC Waghodia. 391760 Dist:Vadodara, Gujarat. India.
O: 91-2668-262 970/263 170 | **E:** inq@galaxysivtek.com | **W:** www.galaxysivtek.com

Domestic Sales:
M:+91-922 744 1209
E: sales@galaxysivtek.com

Overseas Sales:
M:+91-922 744 1206
E: overseas@galaxysivtek.com

After Market:
M:+91-922 744 1205
E: spares@galaxysivtek.com

Reg.Office: 410, Yusuf Building, Veer Nariman Road, Fort, Mumbai-400001. CIN No : U29199MH2006PTC163096

GSPL/GS/01/01/2017 © Specification subject to change without prior notice.

GALAXY SIVTEK
SIEVING & FILTERING Solutions Galaxy Wide

Any Process Industry
Any Application
Increase Product Quality

Precise Screening and Separation

UKAS QUALITY MANAGEMENT 008 | NABCB | CE

800+ Brands **5000+** Successful Projects **12+** Industries **15+** Countries

SIVTEK Vibro Separator

Holistic Solution, High Productivity.

Granules, Powder & Liquid Separation

The high capacity and robust vibrating sifter from Galaxy Sivtek, The SIVTEK Vibro Separator is deployed across major process industries for wide range of applications such as sizing, scalping, check screening, de-watering, clarifying and filtering.

Benefits

- Upto 5 levels of separation in single operation.
- High efficiency and throughput.
- Low maintenance and operating costs-(Deploy & Forget)
- 8 Different machine size available (18”-84”)

Advantages

- As per cGMP and US-FDA norms. (on selected applications only)
- ATEX approved, IP65/66, DIP, CE marked motors available on request.
- Free material trial and test facilities.
- Stringent quality check.

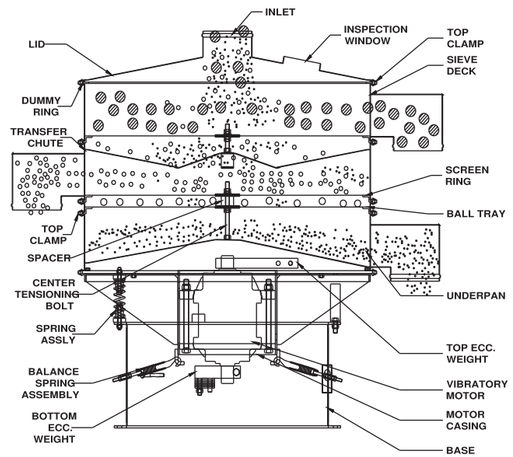

Related Model

Super SIVTEK®

High Capacity Separator

- Higher throughput per unit mesh area.
- Accurate grading of different size particles.
- Able to sieve up to 500#.

A leading F&B brand have increased throughput of starch powder by 150% with SIVTEK High Capacity Screener & Ultrasonic kit.

Material: Starch

Inline SIVTEK®

Safety & Check Screening

- Castor wheels for easy in plant movement.
- Precise and contamination free screening.
- Low head room & high throughput per unit mesh area.

304, 316 or 316L Stainless Steel & Mirror Polished.

A global FMCG company deployed SIVTEK Check Sieving machine to increase product quality of detergent powder before packaging.

Material: Detergent Powder

Advanced Features

Improve Quality

Quick Change Clamping

Benefits

- Ensures safe operation, durable and as per compliance norms.
- Adjustable clamp pressure.

Accurate Mesh Tension

Benefits

- Measure and achieve correct mesh tension.
- Achieve better final product quality.

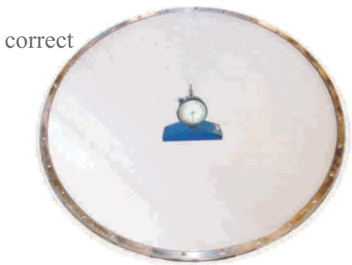

Sandwich Screen Ring

Benefits

- Change mesh within 20 mins.
- No adhesives, decrease downtime & inventory cost.
- Food grade silicon. **(Optional)**

Pharma Screen Ring

Benefits

- US-FDA compliant adhesive.
- Pharma grade silicon gasket.
- Customized. Easy to use, wash & maintain.

Perfect Sealing

Benefits

- Perfect clamping to ensure excellent sealing.
- It eliminate contamination.
- Zero leakage.

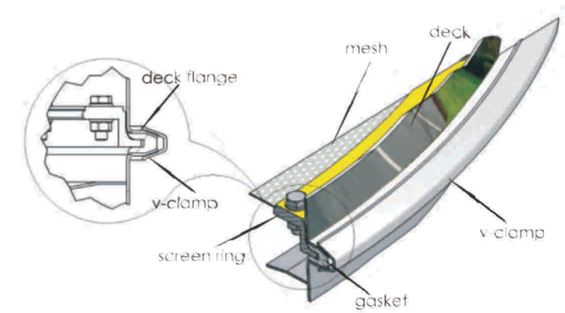

Metal & Minerals

Metal Powder
China Clay
Bentonite
Calcium Carbonate
Silica Sand
Garnet Sand

Plastics & Polymers

PVC Resin Pellet
Polyethylene Powder
Master Batch
Latex

Food and Beverages

Dairy
Spices
Food Grains
Chocolate & Cocoa
Confectionery & Bakery
Juice
Starch
Edible Oil
Sugar Crystal
Refined Sugar

Paper & Pulp

Black Liquor
Coating Solutions
Starch Solution
Back Water

Chemicals & Pigments

Epoxy/MBS Resin
Pigments
Activated Carbon
Fertilizer
Pesticides

Glass & Ceramics

Clay Slip
Glaze
Ceramic Powder